Part No. UI2500

UI39 x 21.0 Shrouded Double Section

'U' Range Bobbin

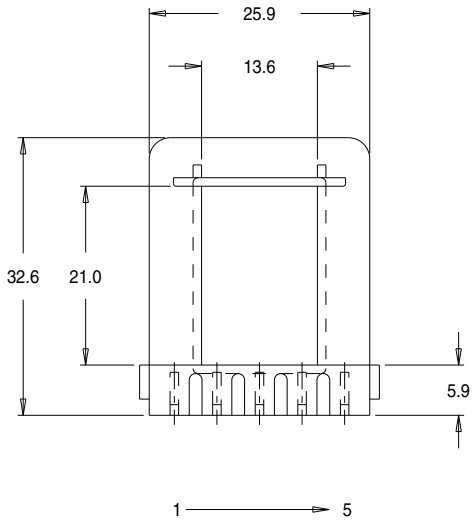

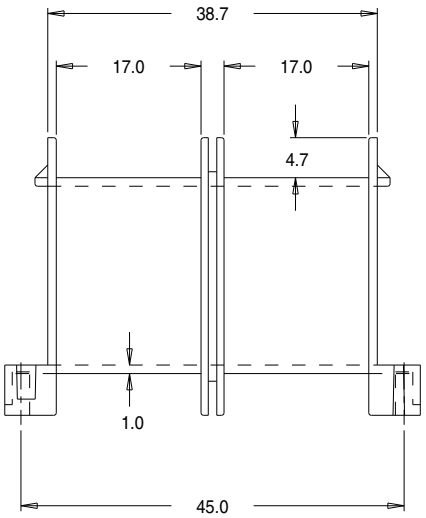

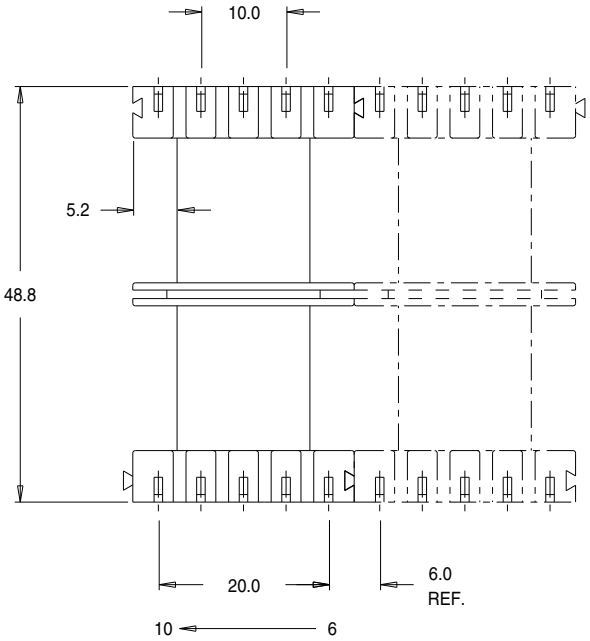

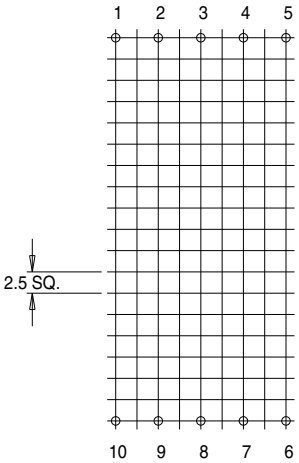

Dimensions in millimetres.

Issue 1